BORDEAUX SCREW 0.750



KMC
GLASS

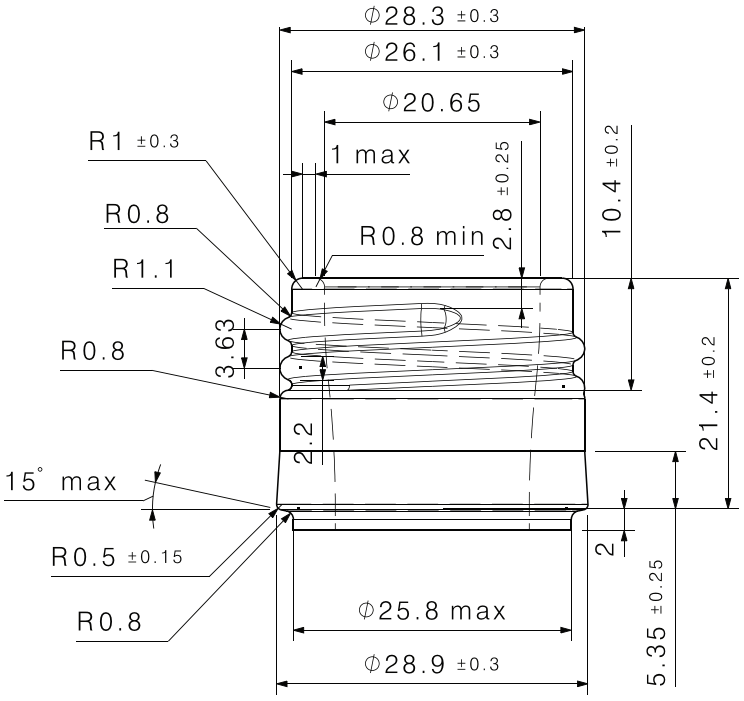

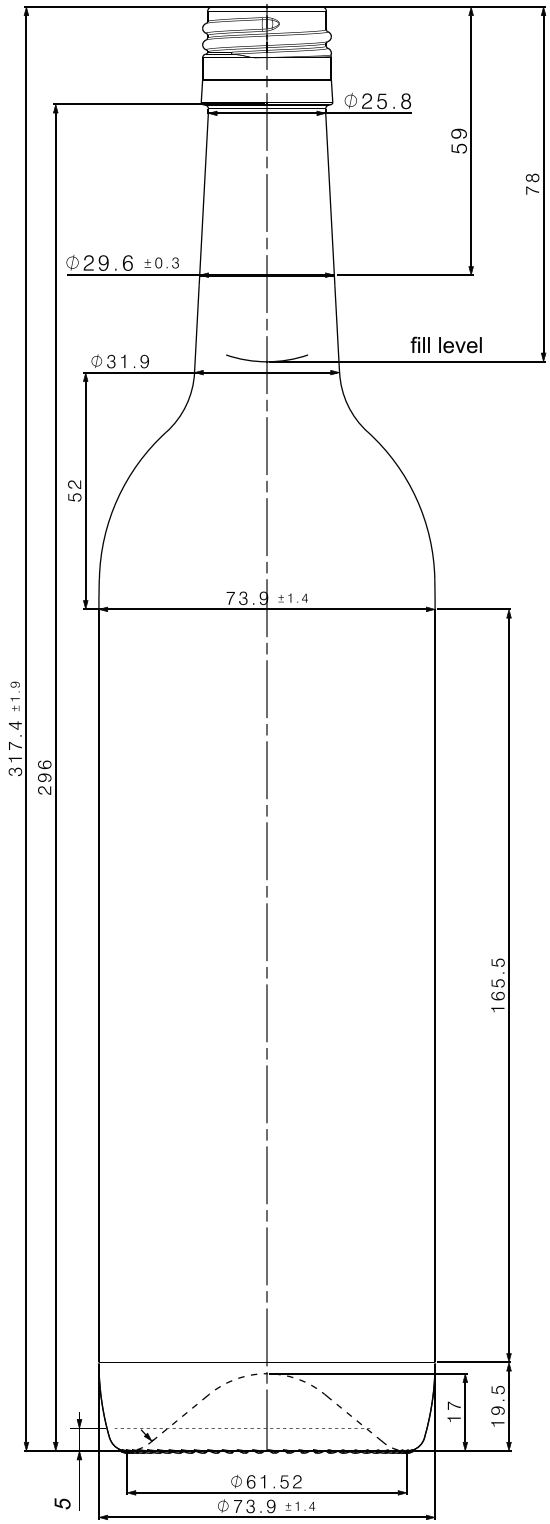

- Bordeaux Screw
- Filling CAP - 750 ml
- Weight - 476 g
- Height - 317.4±1.9 mm
- Diameter - 73.9±1.4 mm
- Finish - BVS 30 H 60
- Color - Olive Green

www.kmc.glass
sales@kmc.glass

KMC GLASS